SALES DRAWING SALES DRAWING

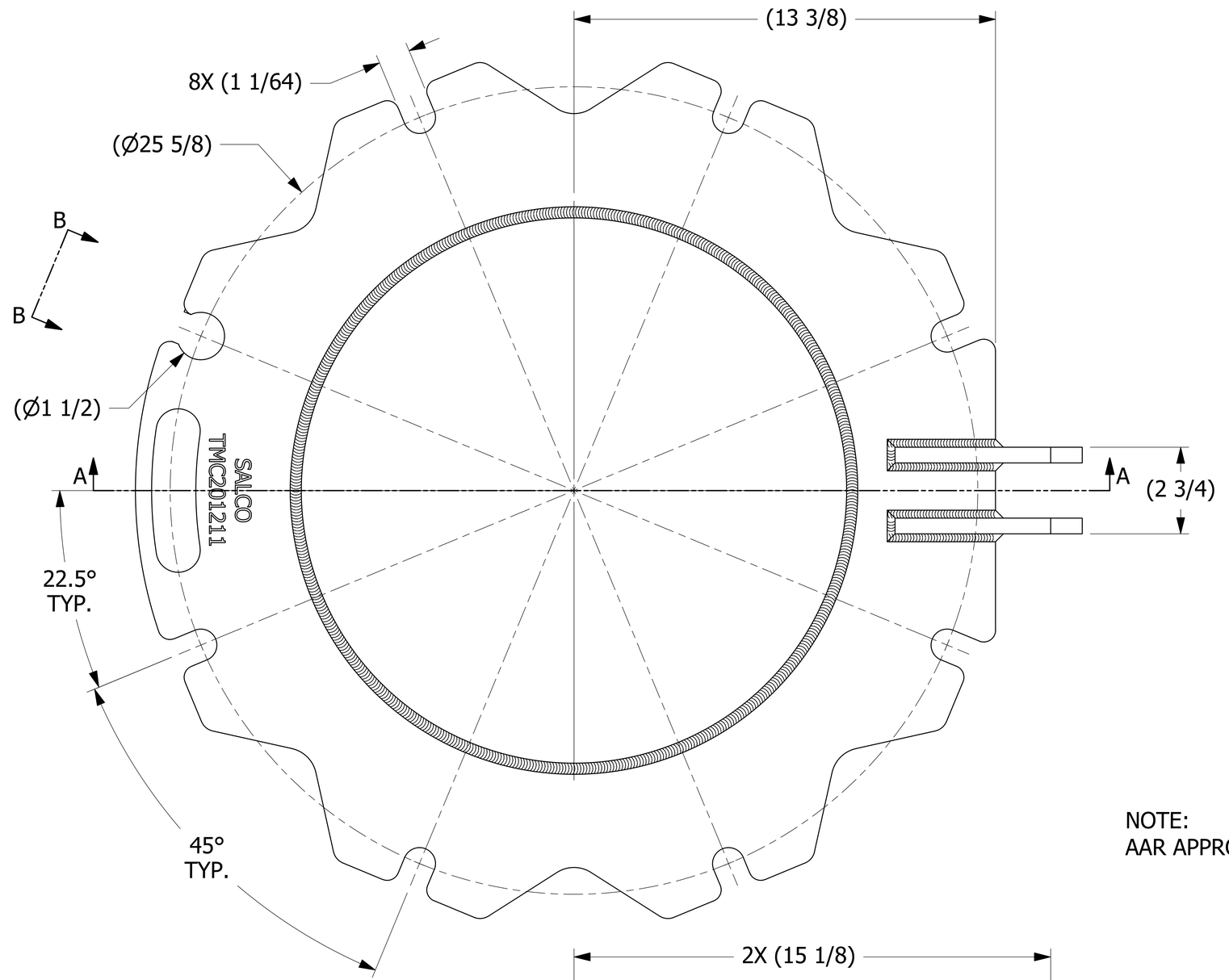

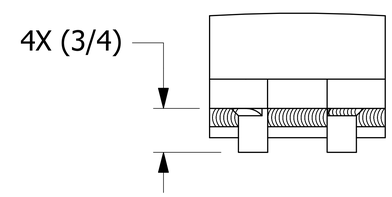

VIEW B-B
SCALE 1 : 1

NOTE:
AAR APPROVAL # E-182113.

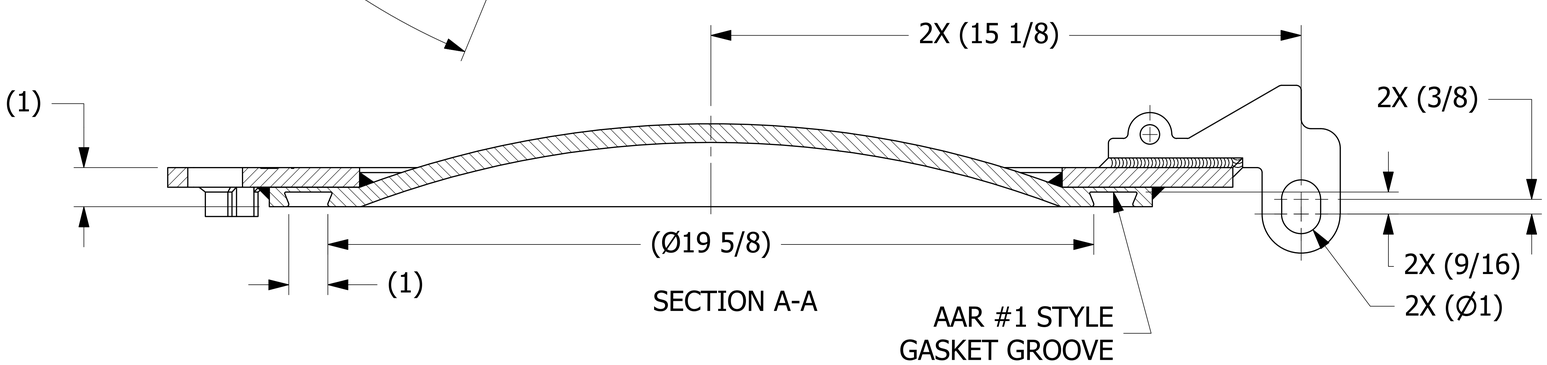

SECTION A-A

REV	BY	DATE	DESCRIPTION
L	WEB	5-20-19	REMOVED QAP4A-1 NOTE; Q-2.15.7 WAS QAP4C-1; D-008 WAS DSS 12; ADDED D-005 NOTE; AAR # WAS E-089005
K	RJP	11-16-17	QTY OF A29293 WAS 4
J	RJP	10-4-17	HINGE WELD WAS 3/8"; 2X .56 WAS 2X .38; 2.75 +.00/-.06 WAS 2.75; ADDED WELD SPATTER NOTE & 2X (3/8); ADDED "SALCO" TO ENGRAVING
I	JG	3-21-17	TMCDR201211 WAS TMCR2012S6 & TMCDSS6MF; UPDATED NOTES, DIMS, VIEWS
H	JG	9-15-15	REPLACED C19931 AND C19933 W/ B41722, UPDATED TITLEBLOCK
G	SMA	12-6-11	ADDED HEAT/LOT NOTE AND NOTE #5
F	CHL	9-24-10	UPDATED NOTES, REPLACED A14392 W/ A29293, UPDATED WELD SYMBOL, ADDED PART NUMBER TO RING SURFACE
E	CHL	5-27-08	UPDATED NOTES AND ADDED VIEW C
D	CHL	7-20-07	UPDATED NOTES
C	AJB	5-3-06	AAR APPROVAL WAS E-989070
B	ACC	5-3-06	UPDATED NOTES
A	ACC	1-24-05	ADDED PART INTO THE SYSTEM

UNLESS OTHERWISE SPECIFIED
DIMENSIONAL TOLERANCES
FRACTIONAL: ±1/16
X.XX: ±.03
X.XXX: ±.015
ANGULAR: ±1°
DEBURR ALL SHARP EDGES.
ALL MACHINED SURFACES TO HAVE A 125 RMS FINISH UNLESS NOTED OTHERWISE.
THIRD ANGLE PROJECTION

DRAWN BY:	ACC
CHECKED BY:	PJG
PROTOTYPE BY:	ACC
PROTOTYPE DATE:	1/24/2005
APPROVED FOR PRODUCTION BY:	ACC
PRODUCTION DATE:	1/24/2005

SALCO PRODUCTS, INC.

PART NAME: MANWAY COVER 20" 8-BOLT

MATERIAL: 316L SS

PROJECT #: WAG0204 | SHEET #: 1 OF 1 | SCALE: 2:3

DRAWING #: E19943 | PART #: TMC201211

THIS PRINT, PROPERTY OF SALCO PRODUCTS INC, CONTAINS PROPRIETARY INFORMATION AND MUST NOT BE COPIED, REPRODUCED, OR USED DETRIMENTALLY TO OUR INTEREST.

SALES DRAWING SALES DRAWING